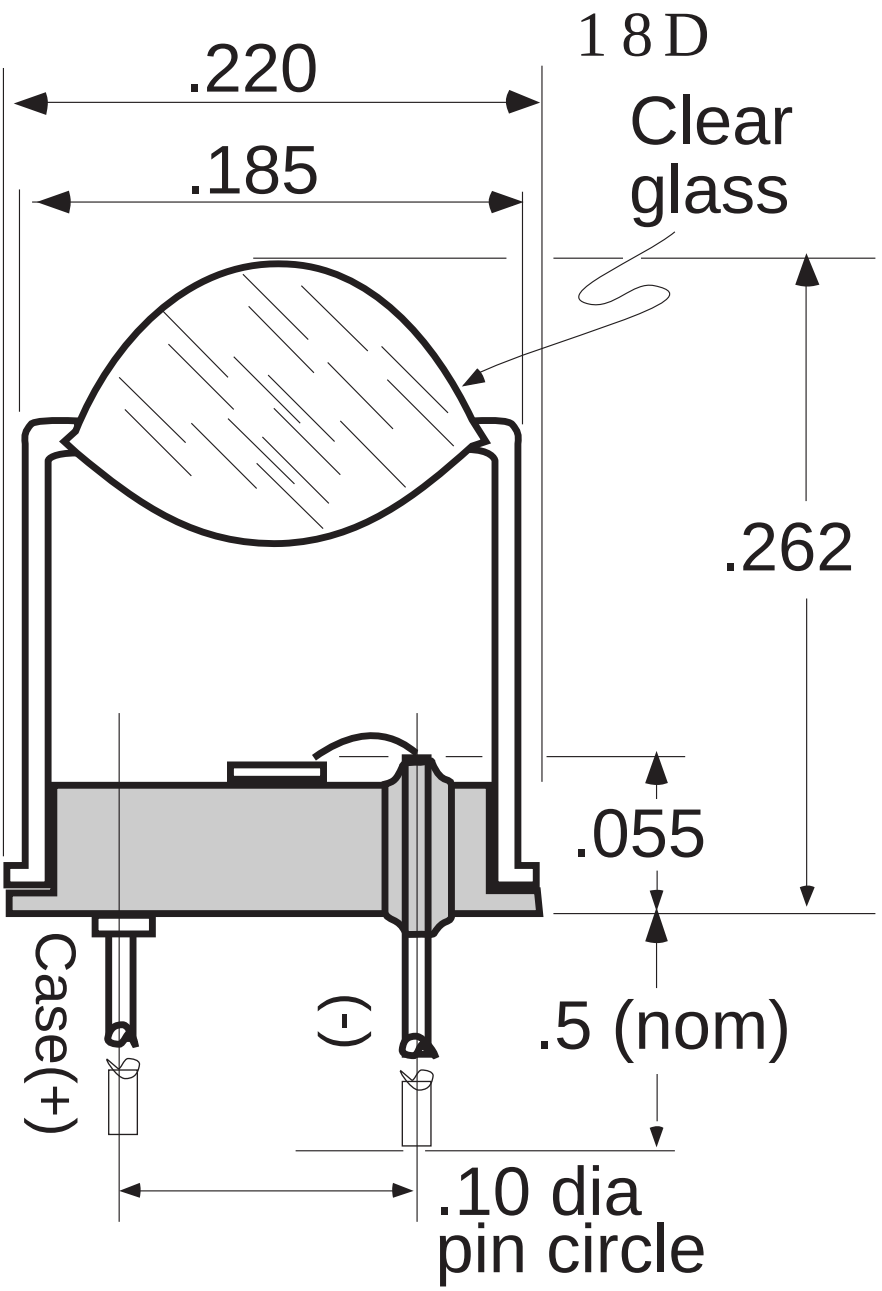
1 8 D
.220
.185
Clear
glass
.262
.055
.5 (nom)
Case(+)
(-)
.10 dia
pin circle

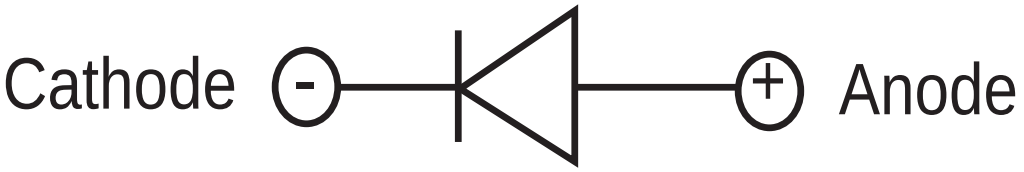
Cathode
-
+
Anode